SECTION 7
TECHNICAL INFORMATION

Hose Flow Chart

How to use this chart: *Determine the proper flow rate that your system requires, then connect a straight edge from the selected flow rate to the recommended velocity range. The required hose I.D. will appear at the intersection of the straight edge and the centre column. If the straight edge passes through the scale between sizes listed, use the next largest I.D. hose.*

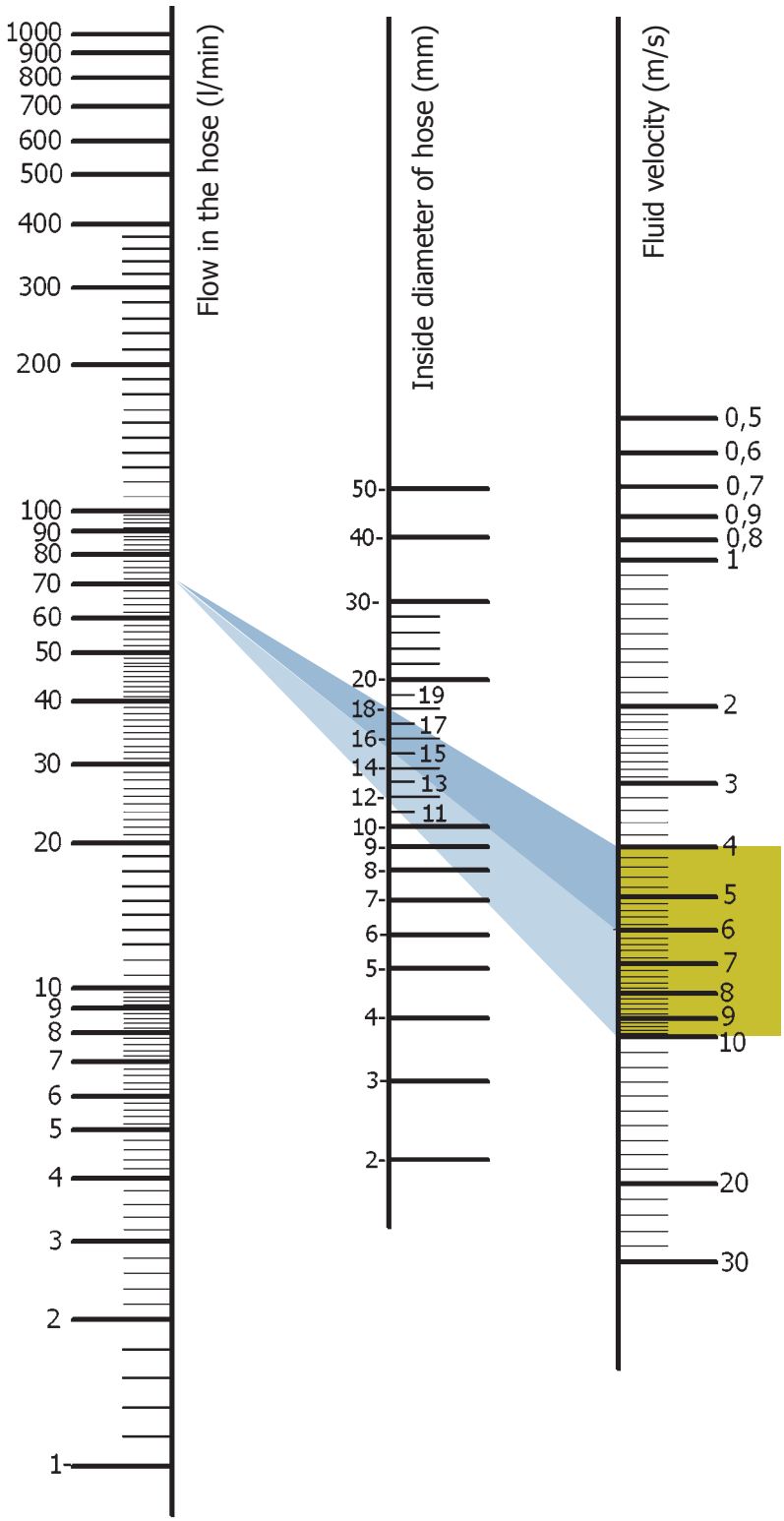

Flange & Adaptor Torque Recommendation

For DIN 2353 12°, 30° and Universal Inverted Cone					
Size O.D mm		Ft. Lbs.		Newton-meters	
Light Series Tube	Heavy Series Tube	Min.	Max.	Min.	Max.
-6	-	7	15	10	20
-8	-	15	26	20	35
-10	-8	18	30	25	40
-12	-10	22	33	30	45
-14	-12	26	37	35	50
-15	-14	30	52	40	70
-	-16	30	52	40	70
-18	-	44	74	60	100
-22	-20	59	89	80	120
-28	-25	74	111	100	150
-	-30	74	162	150	220
-35	-	133	184	180	250
-42	-38	148	221	200	300

For BSP 30° Inverted Cone					
Size		Ft. Lbs.		Newton-meters	
Dash	Inch	Min.	Max.	Min.	Max.
-2	1/8	7	9	9	12
-4	1/4	11	18	15	24
-6	3/8	19	28	26	38
-8	1/2	30	36	41	49
-10	5/8	37	44	50	60
-12	3/4	50	60	68	81
-16	1	79	95	107	129
-20	1 1/4	127	152	172	206
-24	1 1/2	167	190	226	258
-32	2	262	314	355	426

For Flat-Face O'Ring Seal (Steel)					
Size		Ft. Lbs.		Newton-meters	
Dash	Inch	Min.	Max.	Min.	Max.
-4	1/4	10	12	14	16
-6	3/8	18	20	24	27
-8	1/2	32	40	43	54
-10	5/8	46	56	60	75
-12	3/4	65	80	90	110
-14	7/8	65	80	90	110
-16	1	92	105	125	140
-20	1 1/4	125	140	170	190
-24	1 1/2	150	180	200	245

For 4-Bolt Flange Connections			
Bolt Size	Line Size	Torque Nm	Torque Lb-Ft
.31	-8	23	17
.38	-12	35	26
.44	-16	58	43
.50	-20	88	65
.63	-24	176	130
.75	-32	298	220

Notes:

1. *The 4-bolt flange seal is a face seal. The shoulder which contains the seal must fit squarely against the mating surface and be held there with even tension on all bolts.*
2. *Torque values apply to plated bolts and bolts with light engine oil.*
3. *Lubricate o-ring with a light oil (SAE 10W or 20W) before assembly.*
4. *Finger tighten all four bolts making sure the flange and fitting shoulder are started square.*
5. *Tighten all bolts evenly by partially tightening each bolt and repeating the sequence until all bolts are tightened to the specific torque in the table.*

Maximum Recommended Torque for Dry NPTF (Tapered) Pipe Threads*		
Size	Ft-Lbs.	Newton-Meters
2	20	25
4	25	35
6	35	45
8	45	60
12	55	75
16	65	90
20	80	110
24	95	130
32	120	160

***Notes:**

1. *The torque values obtained from tightening pipe threads can vary considerably depending on thread condition. Adequate sealing can occur at values much lower than the maximum values listed above. Only enough torque to achieve adequate sealing should be applied.*
2. *When using a male tapered pipe thread with a female straight or parallel pipe thread, maximum values are 50% of those listed in the table.*
3. *If thread sealant is used, maximum values shown should be decreased by 25%.*

Flange & Adaptor Torque Recommendation

For 37° & 45° (Machined or Flared)

Size		Steel				Brass			
Dash	Inch	Ft. Lbs.		Newton-meters		Ft. Lbs.		Newton-meters	
		Min.	Max.	Min.	Max.	Min.	Max.	Min.	Max.
-4	1/4	10	11	13	15	5	6	6 3/4	9
-5	5/16	13	15	18	20	7	9	10	13
-6	3/8	17	19	23	26	12	15	17	20
-8	1/2	34	38	47	52	20	24	27 2/3	33
-10	5/8	50	56	69	76	34	40	46 1/3	55
-12	3/4	70	78	96	106	53	60	72 1/3	82
-16	1	94	104	127	141	74	82	100 1/2	111
-20	1 1/4	124	138	169	188	75	83	101 1/2	113
-24	1 1/2	156	173	212	235	79	87	107	118
-32	2	219	243	296	329	158	175	214	237

For SAE O-Ring Boss (Steel)

Size		Ft. Lbs.		Newton-meters		Ft. Lbs.		Newton-meters	
Dash	Inch	Min.	Max.	Min.	Max.	Min.	Max.	Min.	Max.
-3	3/16	-	-	-	-	8	10	11	13
-4	1/4	14	16	20	22	14	16	20	22
-5	5/16	-	-	-	-	18	20	24	27
-6	3/8	24	26	33	35	24	26	33	35
-8	1/2	37	44	50	60	50	60	68	78
-10	5/8	50	60	68	81	72	80	98	110
-12	3/4	75	83	101 1/2	113	125	135	170	183
-14	7/8	-	-	-	-	160	180	215	245
-16	1	111	125	150	170	200	220	270	300
-20	1 1/4	133	152	180	206	210	280	285	380
-24	1 1/2	156	184	212	250	270	360	370	490

Adaptor Pressure Rating Chart

JIC - UNO - NPT SAE J514							Flange SAE J518		
SAE Dash Size	Nom Tube O.D	Straight Thread Size	Nom Pipe Size	Rigid SAE Threads Unions and Bulkheads PSI (JICM)	Adjustable SAE Threads and Female Swivels PSI (JICF)	Fittings with Pipe Threads PSI (NPT)	SAE Dash Size	Code 61 Flange (J518) PSI	Code 62 Flange (J518) PSI
-2	0.125	5/16-24	1/8	5000	5000	5000	-2		
-3	0.188	3/8-24	1/8	5000	5000	5000	-3		
-4	0.25	7/16-20	1/8	5000	4500	5000	-4		
-5	0.313	1/2-20	1/8	5000	4000	5000	-5		
-6	0.375	9/16-18	1/4	5000	4000	4000	-6		
-8	0.5	3/4-16	3/8	4500	4000	3000	-8	5000	6000
-10	0.625	7/8-14	1/2	3500	3000	3000	-10		
-12	0.75	1-1/16-12	3/4	3500	3000	2500	-12	5000	6000
-14	0.875	1-3/16-12	3/4	3000	2500	2500	-14		
-16	1	1-5/16-12	1	3000	2500	2000	-16	5000	6000
-20	1.25	1-5/8-12	1-1/4	2500	2000	1150	-20	4000	6000
-24	1.5	1-7/8-12	1-1/2	2000	1500	1000	-24	3000	6000
-32	2	2-1/2-12	2	1500	1125	1000	-32	3000	6000

ORFS - ISO8434-3				Metric L/S - ISO8434		BSPP - ISO8434-6			
Tube O.D		ORFS M & F Nonadjustable PSI	ORFS M & F Adjustable (Positional Fittings) (PSI)	DIN (L) Cone & Cutting Ring ISO8434 (BAR)	DIN (S) Cone & Cutting Ring ISO8434 (BAR)	Nom Tube O.D	Thread size	60 Degree Cone - With O'Ring BSPP (BAR)	60 Degree Cone - Without O'Ring BSPP (BAR)
6	1/4	9135	5800	250	630	6	1/8	-	350
8	5/16	9135	5800	250	630	8	1/4	400	350
10	3/8	9135	5800	250	630	10	3/8	400	350
12	1/2	9135	5800	250	400	12	1/2	350	315
16	5/8	9135	5800	250	400	16	5/8	350	315
20	3/4	5800	5800	160	400	20	3/4	315	250
22	7/8	5800	5075	160	400				
25	1	5800	5075	100	250	25	1	250	200
30	1 1/14	3625	3625	100	250	32	1-1/4	200	160
38	1 1/2	3625	3625	100	250	38	1-1/2	160	125
50	N/A	N/A	N/A	100	250	50	2	125	80

Notes:

- *Working pressures given are for low carbon steel fittings only.*
- *Proof pressure is twice working pressure.*
- *Burst pressure is 4 x working pressure.*
- *Cyclic endurance is tested at 133% of working pressure for 1 million cycles IAW J343.*

Hose Assembly Instructions

1 - Select the correct hose tail series for the intended hose:

100R1	"D" reusables & "K" series permanent crimp
100R2	"D" reusables & "K" series permanent crimp
100R5	"DF" reusables, "F" series & "K" series permanent crimp
100R6	"H" series push on tails
100R7	"J" series one piece permanent crimp
100R8	"J" series one piece permanent crimp
100R12	"L" series one piece permanent crimp
100R13	"N" series one piece permanent crimp
100R14	"C" series one piece permanent crimp
100R15	"N" series one piece permanent crimp, -06 & -08 "L" series, -32 "NP" series
100R16	"K" series permanent crimp
100R17	"K" series permanent crimp
100R19	"K" series permanent crimp

2 - Mark insertion depth on hose with suitable marker

Hose dash size	Insertion depth in mm				
	A	K	L	M	N
-4	37	21			
-5		24			
-6	40	29	27		
-8	40	33	32		
-10	40	40	33	47	
-12	40	38	37	48	56
-16	43	44	44	51	59
-20		48	46	64	71
-24		37	59	62	
-32		46	62	73	

Step 1

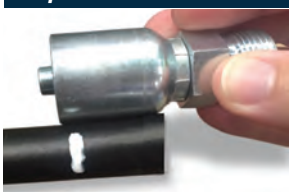

Step 2

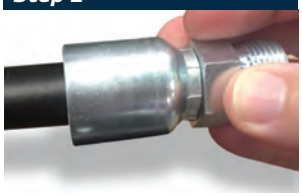

3 - Lubricate if necessary with either Rubber Grease Castrol GRR(B) or clean SAE30 engine oil

Do not use lubricant on multispiral hose

4 - Insert hose into fitting to depth indicated above

5 - Set press to dimension required *(crimp charts can be downloaded from the resources page on our website).*

6a - For K, L & N series fittings, insert hose and tail into press so entire shell is inside the die set

Crimp to desired dimension
Remove and check final crimp size (must be within +-0.25mm of designated dimension)
(Diameter is to be measured at the centre of the shell)

6b - C & J series require a bump to be left on the top closest to the nut

Refer to current crimp chart for crimp length - head to www.taipan.com.au/resources/

6c - For D & DF series reusables

Cut hose to length
Screw socket onto hose in counter clockwise direction until hose bottoms out
Back off 1/2 turn
Dip hose end into SAE30 engine oil or similar heavy oil, Rubber grease may also be used
Screw tail into shell until the Hex on the nipple rests against the shoulder on the shell

7 - Clean hose using Polyshot or similar cleaner and ensure there are no foreign objects left in the hose

Note: for stainless steel Dow Corning Molykote G-N or equivalent lubricant must be used or thread will seize.

Conversion Factors

Multiply	By	To Obtain	Example
		Pressure	
Pound/Inch sq (psi)	0.069	Bar	100 PSI by 0.069 = 6.895 bar
Pound/Inch sq (psi)	0.070	Kilogram/centimetre sq	100 PSI by 0.070 = 7.031 Kg/cm
Pound/Inch sq (psi)	6.895	kilopascal (Kpa)	100 PSI BY 6.895 = 689.476 Kpa
Pound/Inch sq (psi)	0.007	Megapascal (Mpa)	100 PSI by 0.00689 = 0.689 Mpa
		Velocity	
Inch/min	25.4	Millimetre/min	10 Inch/min by 25.4 = 254 mm/min
Foot/min	0.305	Metre/min	10 Foot/min by 0.3048 = 3.048 Metres/min
Mile/Hour	1.609	Kilometre/hr	10 MPH by 1.609 = 16.093 km/hr
Gallons/min U.K.	4.546	Litre/min	10 GPM (U.K.) by 4.546 = 45.460 L/min
Gallons/min U.S.	3.785	Litre/min	10 GPM (U.S.) by 3.785 = 37.854 L/min
		Linear	
Inch (ins)	25.4	Millimetre (mm)	1 5/16 ins to 1.3125 ins by 25.4 = 33.334 mm
Foot(ft)	0.305	Metre (M)	3 ft 6 ins to 3.5 ft by 0.305 = 1.07 Metres
		Area	
Square Inch	645.16	Square Millimetre	10 sq ins by 645.16 = 6,4516 sq mm
Square Foot	0.093	Square Metre	10 sq ft by 0.093 = 0.93 sq m
		Volume	
Gallons U.K.	277.42	Cubic Inches	10 U.K. gals by 277.42 = 2,774.2 cu in
Gallons U.S.	231.000	Cubic Inches	10 U.S. gals by 231 = 2,310 cu in
Cubic Inches	16.387	Cubic Centimetres	54.5 cu ins by 16.387 = 893.095 cu in
Cubic Inches	0.016	Litre	1,000 cu ins by 0.016 = 16,387 Litres
Gallons U.K.	4.546	Litre	10 U.K. gals by 4.546 = 45.461 Litres
Gallons U.S.	3.785	Litre	10 U.S. gals by 3.785 = 37.854 Litres
		Mass & Density	
Pound (avoirdupois)	0.454	Kilogram	10 pounds by 0.454 = 4.536 kg
Ton (long 2,240 lb)	1.016	Tonne	10 ton by 1.016 = 10.016 tonnes
Ton (short 2,000 lb)	0.907	Tonne	10 ton by 0.907 = 9.072 tonnes
Ton (metric)	1.000	Tonne	10 ton by 1.0 = 10.0 tonnes
		Force	
Kilogram-force	9.80665	Newton (N)	10 kilogram-force by 9.80665 = 98.0665 N
		Torque	
Pound -Inch	0.113	Newton-Metre (Nm)	10 pound-in by 0.113 = 1.130 Nm
Pound-Foot	1.356	Newton-Metre (Nm)	10 pound-ft by 1.356 = 13.559 Nm
		Power	
Horsepower (hp)	0.746	kilowatt (kW)	10 hp by 0.746 = 7.457 kW
		Temperature	
Degrees Fahrenheit	(°F-32)/1.8	Degrees Celsius	(100 °F-32) divide by 1.8 = 37.778°C
Degrees Celsius	1.8 °C + 32	Degrees Fahrenheit	(1.8 by 100 °C) plus 32 = 212 °F

Standards & Certifications of Product

TAIPAN HOSE RANGE		SAE	USCG	ISO	DNV	EN /DIN	MSHA	BV	LR	MED	MA	API	KR	ABS	DOT	GL
HOSE	SIZES															
100R1	ALL	SAE J517		ISO6805			X		X				X	X		
100R2	ALL	SAE J517		ISO6805		EN853	X		X				X	X		
100R2GP	ALL	SAE J517														
100R2H	1 1/4" TO 2"	SAE J517				EN853	X									
100R2J																
100R4	ALL	SAE J1527 TYPE A														
100R5 (FC300)	ALL	SAE J517, J1019, J1402	X		X									X		
100R5H	ALL	SAE J517													X	
100R6	ALL	SAE J517					X									
100R6 (FC332)	ALL	SAE J517												X		
100R6H	ALL	SAE J517					X									
100R7	ALL	SAE J517		ISO3949-R7		EN855										
100R7NC	ALL	SAE J517		ISO3949-R7		EN855										
100R8		SAE J517		ISO3949-R8		EN855										
100R8NC		SAE J517		ISO3949-R8		EN855										
100R12	1 1/2" TO 2"	SAE J517			X	EN856	X							X		
100R12SF	1 1/4" TO 1 1/2"	SAE J517			X	EN856	X		X	X				X		
100R12 SF	3/4" AND 1"	SAE J517			X		X	X								
100R13	3/4" TO 1 1/4"	SAE J517					X		X				X	X		
100R14	ALL	SAE J517														
100R15	2"	SAE J517		ISO3862		EN856	X									
100R15	3/8" to 1 1/2"	SAE J517			X	EN856	X		X	X				X		
100R16	ALL	SAE J517					X		X							
100R16H	1/4" to 1"	SAE J517			X	EN857	X									
100R16TC	ALL	SAE J517			X	EN857	X		X					X		
R16TW100	3/8"			ISO11237		EN857		X								
100R17	ALL	SAE J517					X									
100R18TW	ALL	SAE J517		ISO3949-R18												
100R19	ALL	SAE J517			X		X									
GH506	ALL			ISO3862	X	EN856 TYPE 4SH	X									
MUD HOSE	2"											7K				
100R2PWH	ALL					EN7751 / 1829-1										
SAEJ188	3/8"	SAEJ188														
TX2	1/4" TO 1"	SAE J517			X	EN857	X							X		
TX4000	3/8" TO 1"	SAE J517			X	EN856	X		X	X				X		
TX6000	3/8" TO 1 1/4"	SAE J517		ISO18752-CC			X							X		

Metric Thread Chart

SEAL	30° FLARE	24° CONE	24° CONE	24° CONE	24° CONE	60° CONE
Measure the tube seat						
O.D PITCH	KOMATSU	DIN L LIGHT	DIN S HEAVY	FRENCH GAZ	ISO	DIN 7631
M12 x 1.5		-6				-6
M14 x 1.5	-4	-8	-6			-8
M16 x 1.5		-10	-8			-10
M18 x 1.5	-6	-12	-10			-12
M20 x 1.5			-12	-13	-14	
M22 x 1.5	-8	-15	-14			-15
M24 x 1.5	-10		-16	-17		
M26 x 1.5		-18				-18
M27 x 1.5					-18	
M30 x 1.5	-12			-21	-22	-22
M30 x 2		-22	-20			
M33 x 1.5	-16				-25	
M33 x 2						
M36 x 1.5	-20			-27	-28	
M36 x 2		-28	-25			
M38 x 1.5						-28
M39 x 1.5					-30	
M39 x 2						
M42 x 1.5	-24				-32	
M42 x 2			-30			
M45 x 1.5				-33	-35	-35
M45 x 2		-35				
M48 x 1.5					-38	
M52 x 1.5				-42	-40	-42
M52 x 2		-42	-38			

Procedure for Identifying Metric Threads

- MALES -	- FEMALES -
1) Measure pitch 2) Measure outside diameter 3) Measure the tube seat 4) Refer to the above chart	1) Measure pitch 2) Measure inside diameter 3) Add pitch to I.D = Male O.D 4) Measure the tube seat 5) Refer to the above chart

3000 PSI Code 61 Flange Profile/Sizes				
Size	H	I	Ø Screw Hole	Ø Threads
1/2"	17.5	38.1	8.7	M8 - 5/16
3/4"	22.3	47.6	10.9	M10 - 3/8
1"	26.2	52.4	10.5	M10 - 3/8
1 1/4"	30.2	58.7	11.8	M10 - 7/16
1 1/2"	35.7	69.9	13.4	M12 - 1/2
2"	42.9	77.8	13.4	M12 - 1/2
2 1/2"	50.8	88.9	13.4	M12/M14 - 1/2
3"	61.9	106.4	17.4	M16 - 5/8
4"	77.8	130.2	17	M16 - 5/8

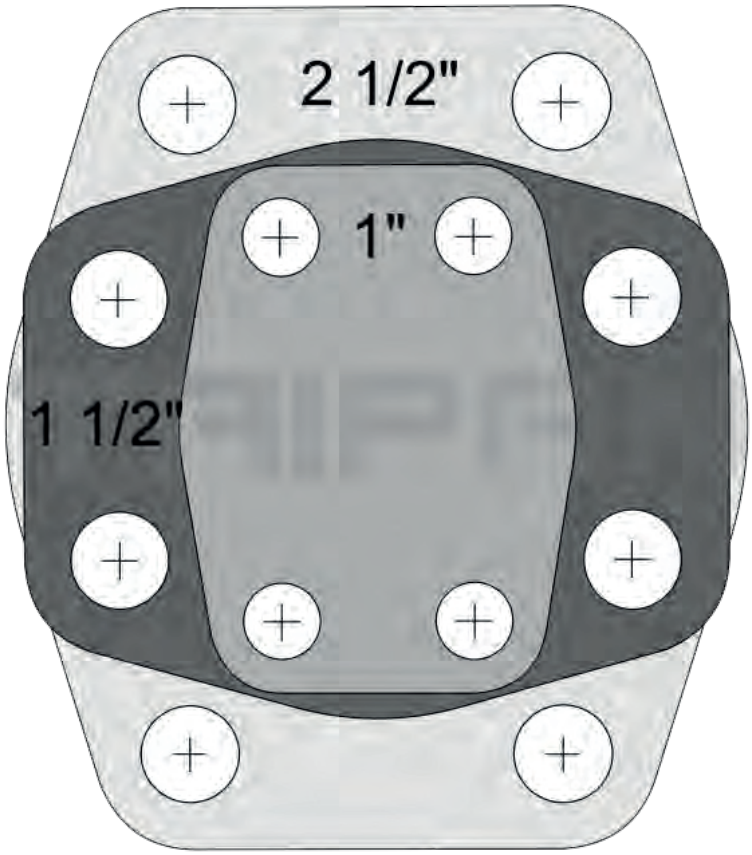

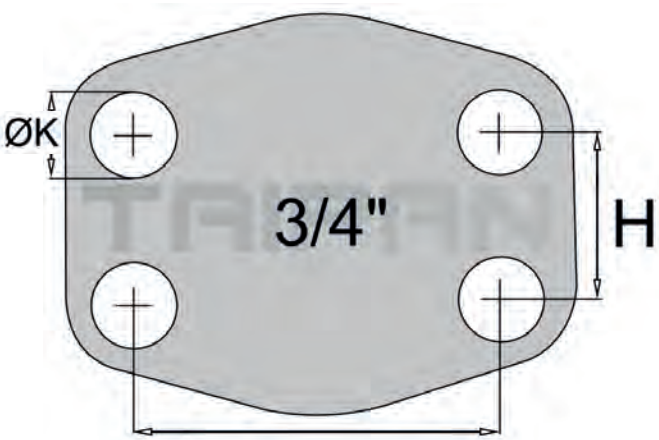

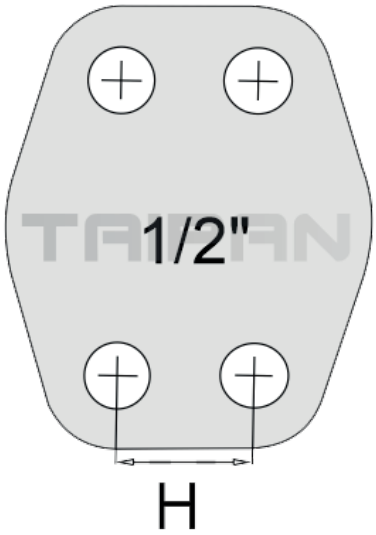

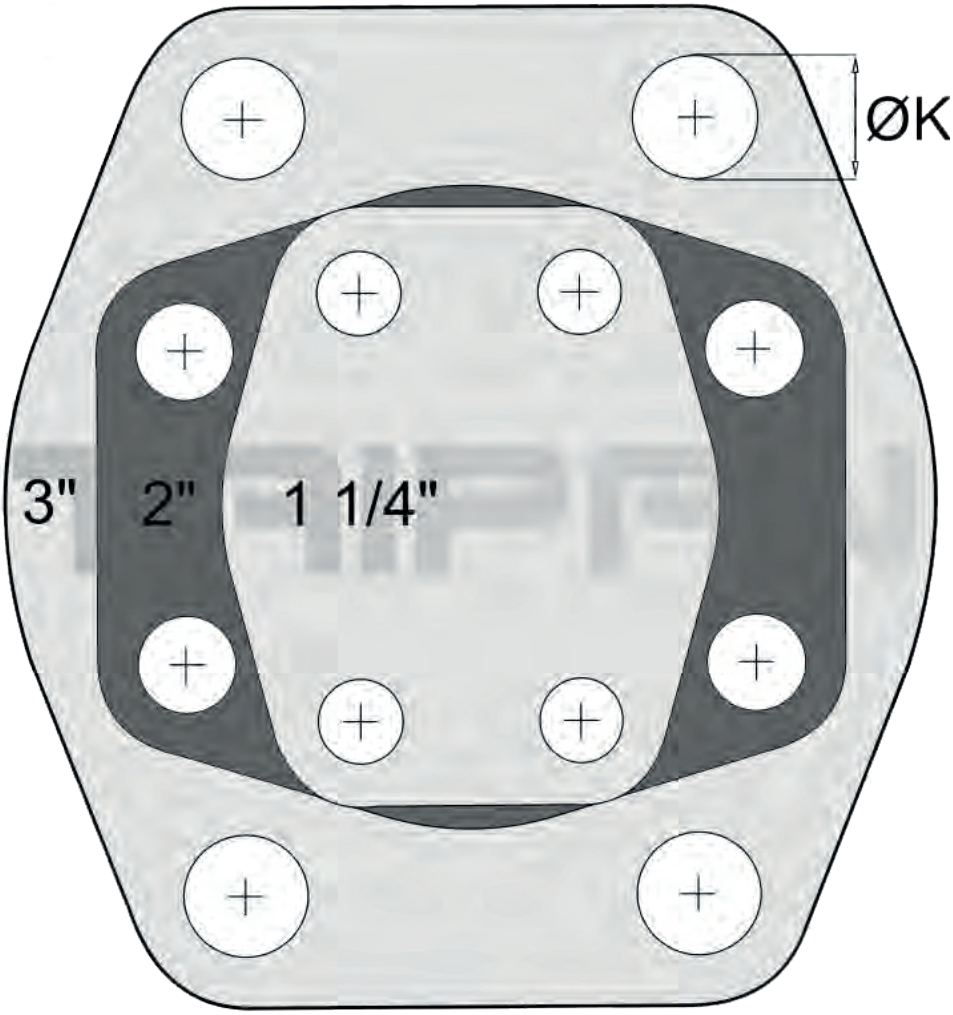

6000 PSI Code 62 Flange Profile/Sizes				
Size	H	I	Ø Screw Hole	Ø Threads
1/2"	18.5	40.5	8.7	M8 - 5/16
3/4"	23.8	50.8	10.5	M10 - 3/8
1"	27.8	57.2	12.2	M12 - 7/16
1 1/4"	31.8	66.6	14.9	M12/M14 - 1/2
1 1/2"	36.5	79.3	16.7	M16 - 5/8
2"	44.5	96.8	21.3	M20 - 3/4

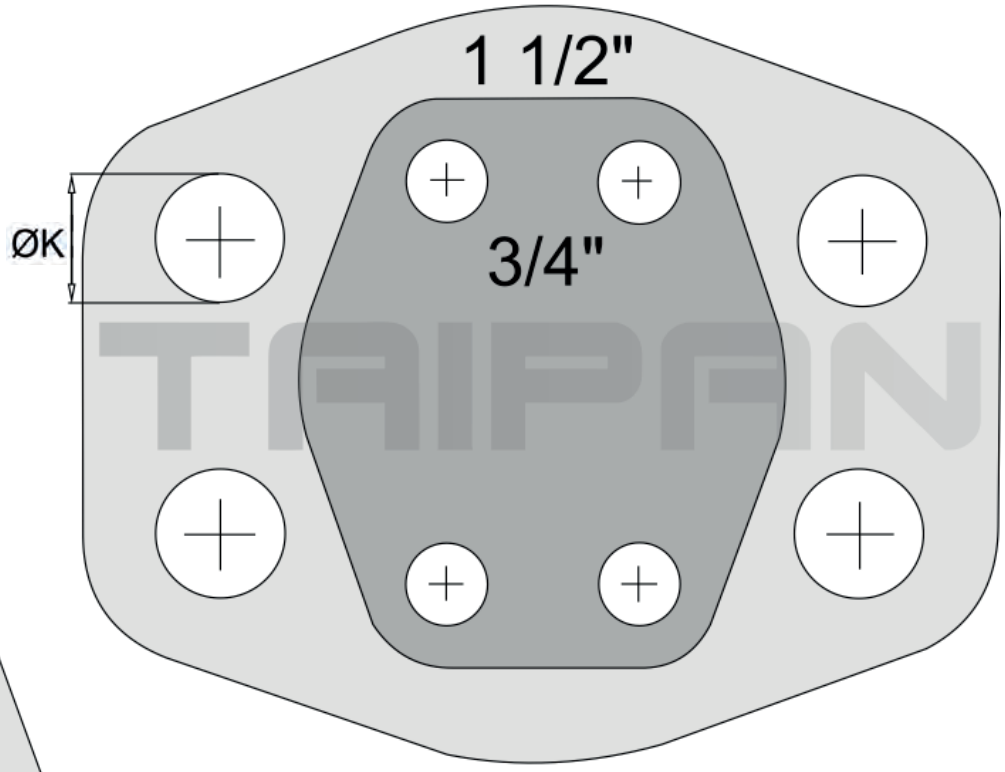

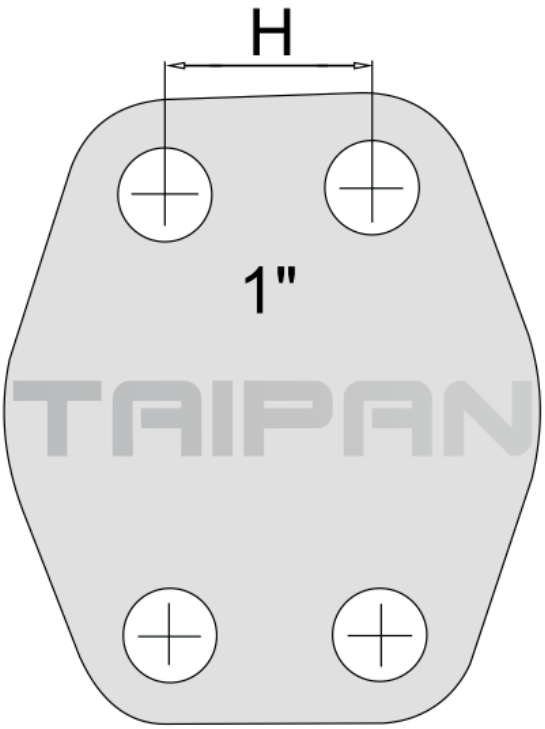

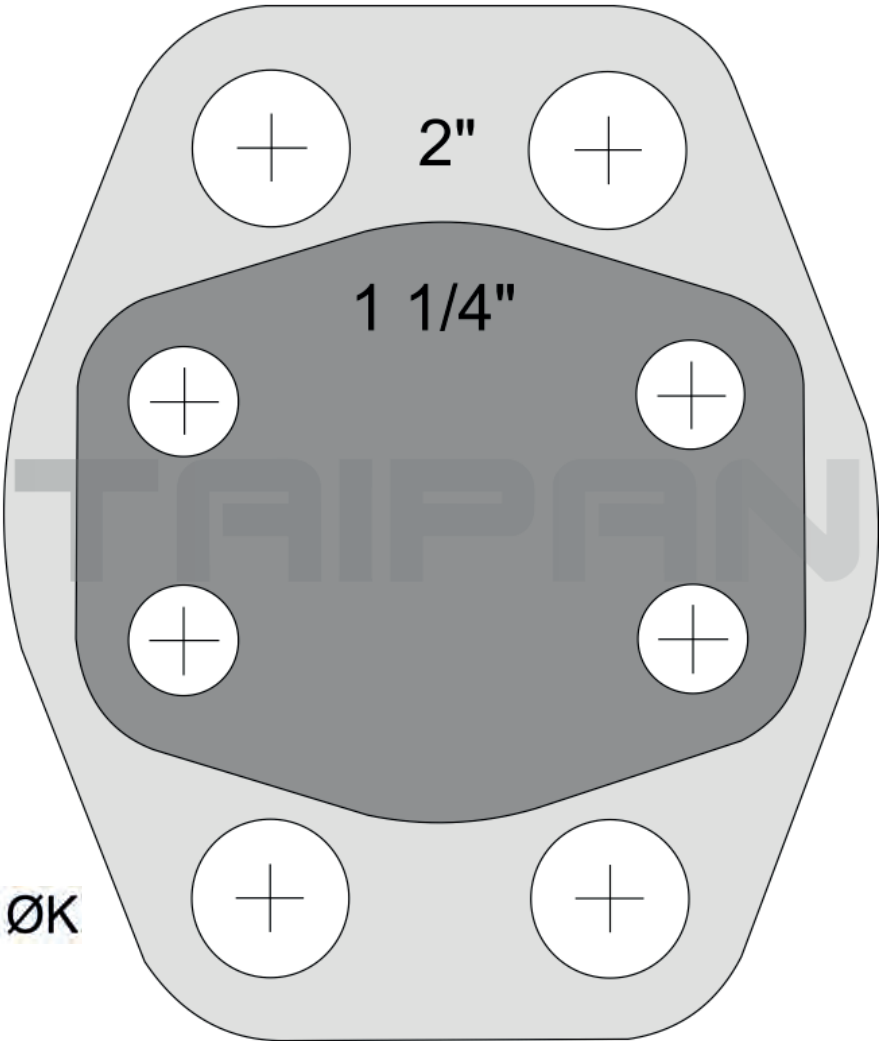

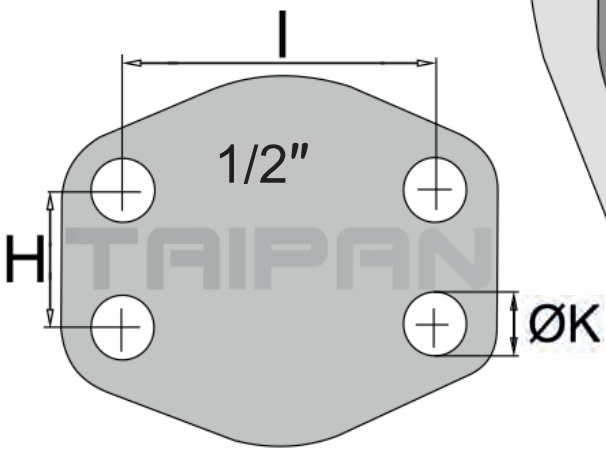

Thread Identification Chart

DASH SIZE	THREAD/ FLANGE SIZE	BSPT 60° CONE		BSPP ISO 8434-6		NPT NPSM- 60° CONE		JIC & UNO (UNF THREAD) SAE J514, ISO 8434-2 (UNF THREAD)	
		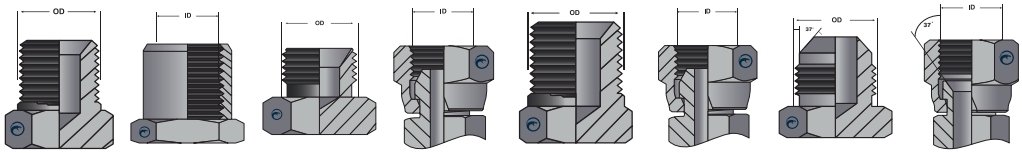							
		MALE O.D (TPI) ISO 7-1	FEMALE I.D (TPI)	MALE O.D (TPI)	FEMALE I.D (TPI)	MALE O.D (TPI) ANSI B 1.20.3	FEMALE I.D (TPI)	MALE O.D (TPI)	FEMALE I.D (TPI)
-02	**1/8**	9.5 (28)	8.4 (28)	9.6 (28)	8.6 (28)	9.9 (27)	8.7 (27)		
-04	**1/4**	12.8 (19)	11.2 (19)	13.0 (19)	11.9 (19)	13.2 (18)	11.2 (18)		
-05	**5/16**							7.9 (24)	6.9 (24)
-06	**3/8**	16.3 (19)	14.7 (19)	16.5 (19)	15.2 (19)	16.6 (18)	14.7 (18)	9.5 (24)	8.5 (24)
-07	**7/16**							11.1 (20)	9.9 (20)
-08	**1/2**	20.4 (14)	18.3 (14)	20.8 (14)	19.1 (14)	20.6 (14)	17.8 (14)	12.7 (20)	11.4 (20)
-09	**9/16**							14.3 (18)	13.0 (18)
-10	**5/8**	22.5 (14)	20.6 (14)	22.8 (14)	20.8 (14)				
-11	**11/16**								
-12	**3/4**	25.9 (14)	23.9 (14)	26.3 (14)	24.6 (14)	26.0 (14)	23.4 (14)	19.1 (16)	17.5 (16)
-13	**13/16**								
-14	**7/8**							22.2 (14)	20.3 (14)
-16	**1**	32.6 (11)	29.7 (11)	33.1 (11)	30.7 (11)	32.5 (11.5)	29.5 (11.5)		
-17	**1.1/16**							27.0 (12)	24.9 (12)
-19	**1.3/16**							30.2 (12)	28.2 (12)
-20	**1.1/4**	41.1 (11)	38.6 (11)	41.8 (11)	39.4 (11)	41.2 (11.5)	38.1 (11.5)		
-21	**1.5/16**							33.3 (12)	31.2 (12)
-23	**1.7/16**								
-24	**1.1/2**	47.0 (11)	44.5 (11)	47.7 (11)	45.5 (11)	47.3 (11.5)	43.9 (11.5)		
-26	**1.5/8**							41.3 (12)	39.1 (12)
-27	**1.11/16**								
-30	**1.7/8**							47.6 (12)	45.5 (12)
-32	**2**	58.6 (11)	56.4 (11)	59.5 (11)	57.4 (11)	59.3 (11.5)	56.4 (11.5)		
-40	**2.1/2**	74.1 (11)	71.9 (11)	75.1 (11)	72.6 (11)	71.5 (8)	69.1 (8)	63.5 (12)	61.5 (12)
-48	**3**	86.6 (11)	84.6 (11)	87.9 (11)	85.4 (11)	87.3 (8)	84.8 (8)		

Thread Identification Chart

DASH SIZE	THREAD/ FLANGE SIZE	ORFS (UNF) ISO 8434-3		SAE 45 FLARE SAE J514		SAE CODE 61 SAE J518		SAE CODE 62 SAE J518	
		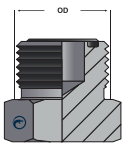	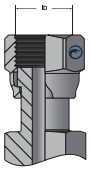	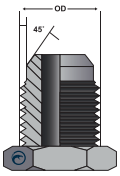	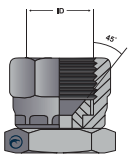	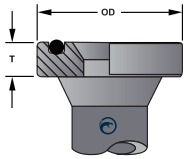		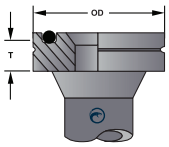	
		MALE O.D (TPI)	FEMALE I.D (TPI)	MALE O.D (TPI)	FEMALE I.D (TPI)	O.D	THICKNESS	O.D	THICKNESS
-02	1/8								
-04	1/4								
-05	5/16			7.9 (24)	6.8 (24)				
-06	3/8			9.5 (24)	8.4 (24)				
-07	7/16			11.1 (20)	9.9 (20)				
-08	1/2			12.7 (20)	11.4 (20)	30.2	6.73	31.7	7.75
-09	9/16	14.3 (18)	12.9 (18)						
-10	5/8			15.9 (18)	14.2 (18)	34.0	6.73		
-11	11/16	17.3 (16)	16.0 (16)						
-12	3/4			19.1 (16)	17.5 (16)	38.1	6.73	41.3	8.76
-13	13/16	20.6 (16)	19.1 (16)						
-14	7/8			22.2 (14)	20.6 (14)				
-16	1	25.4 (14)	23.6 (14)			44.5	8.00	47.6	9.53
-17	1.1/16			27.0 (14)	24.9 (14)				
-19	1.3/16	30.0 (12)	28.2 (12)						
-20	1.1/4					50.8	8.00	54.0	10.29
-21	1.5/16								
-23	1.7/16	36.3 (12)	34.3 (12)						
-24	1.1/2					60.3	8.00	63.5	12.57
-26	1.5/8								
-27	1.11/16	42.7 (12)	40.6 (12)						
-30	1.7/8								
-32	2	51.8 (12)	48.8 (12)			71.4	9.53	79.4	12.57
-40	2.1/2					84.1	9.53		
-48	3					101.6	9.53		

AUSTRALIAN
OWNED AND OPERATED

We are proudly Australian owned and operated

IN OPERATION FOR
30
YEARS

Taipan Hydraulics has been in operation for over 30 years

2500+
ADAPTORS

6500+
PRODUCTS

We stock a massive range of quality hydraulic hoses and adaptors

TAIPAN
Hydraulic Hose Systems

TAIPAN

Hydraulic Hose Systems

CABOOLTURE

11-13 Lear Jet Drive
Caboolture, QLD 4510
Ph: 07 5428 1211
Fax: 07 5428 1311

ROCKLEA

41 Shettleston Street
Rocklea, QLD 4106
Ph: 07 3274 3433
Fax: 07 3274 3477

ADELAIDE

Warehouse 1
Lot 552 Wilkins Road
Wingfield, SA 5013
Ph: 08 8448 3969

MELBOURNE

23 Endeavour Way
Sunshine West, Vic 3020
Ph: 03 9109 2109
Fax: 03 8317 9049

PERTH

3 Mordaunt Cct
Canning Vale, WA 6155
Ph: 08 9456 5448
Fax: 08 9256 1242

CONTACT US 1300 654 782

taipan.com.au